
TERRAINKING
A Member of the ALAMO GROUP
PRODUCT GUIDE

ALAMO GROUP

MUNICIPAL MOWING SOLUTIONS

As a proud member of Alamo Group, Municipal Mowing Solutions is committed to driving the evolution of global equipment solutions. We value the safety and prosperity of communities around the world and hold ourselves accountable for preserving the health of our planet. We respond proactively to the ever-changing nature of our world, developing groundbreaking equipment that meets the changing needs of every community. At Alamo Group, we believe in a better future – because we're building it.

At Alamo Group Municipal Mowing Solutions, we bring together four industry-leading brands—Alamo Industrial, Terrain King, Mantis, and Tiger —to deliver powerful, purpose-built vegetation management solutions trusted by municipalities, contractors, and public works professionals.

Alamo Industrial has been a leader in right-of-way clearing, roadside mowing, and grounds maintenance equipment for over 50 years, offering durable boom, flail, and rotary mowers designed for long life and reliable performance.

Tiger builds rugged rotary and flail boom mowers, side and rear mowers, and specialty mowing systems that tackle the toughest roadside vegetation challenges with quality and dependability.

Terrain King partners with Kubota engineering to craft high-performance tractor-mounted mowers and brush cutters that deliver precision and efficiency in roadside and right-of-way maintenance.

Mantis delivers next-generation prime mover solutions with exceptional maneuverability and attachment flexibility—built in the USA to power through demanding mowing, cutting, and clearing tasks.

Together, AGMMS equips crews with rugged, innovative machinery that keeps public spaces safe, scenic, and well-maintained—every season, every job.

TERRAINKING



KB1800/2200

Efficient Hydraulics
A self-contained front-mounted system, featuring an open-loop gear pump and oil-to-air heat exchanger, increases cutting power and extends the life of the components.

Turret Design
A slewing ring, mated by means of a turret, is featured in lieu of an industry standard king post. The turret provides for a full 180° of boom swing from the front to the rear.

Strength
The boom is made of high strength alloy steel and the main pivots utilize 2” chrome pins with greasable, hardened steel bushings to promote durability.

Boom Reach
18’ & 22’
*with 60” Rotary Head

Below Grade Reach
7’4” & 9’7”

Horizontal Reach
18’ & 22’

Vertical Reach
17’1” & 19’7”

Other Available Attachments
48” Grass Flail
48” Heavy Duty Flail
50” Severe Duty Flail
60” HD Grass Flail
60” Limb Shear
50” and 60” Heavy Duty Rotary
Maintainer Head
Saw Blade





KB21

Mounting Frame & Turning Arm
Bolted frame design structurally ties front bolster to rear axle plates. Mid-mounted with lower center of gravity.

Control Features
Master safety switch permits six second blade shut-down. Standard proportional joystick controls.

Hydraulic Reservoir
Large capacity under fender hydraulic tank with a return filter placement that allows easy access.

Boom Reach
21’ *with 60” Rotary Head

Below Grade Reach
13’6”

Horizontal Reach
21’7”

Vertical Reach
18’1”

Other Available Attachments
48” Heavy Duty Flail
50” and 60” Heavy Duty Rotary
Saw Blade

48” HD Grass Flail

The HD Grass Flail is equipped with 28 pairs of reversible grass knives and can cut grass and brush up to 2” in diameter.
KB1800/2200, KB21

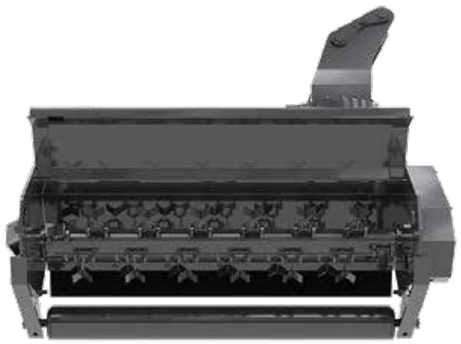

48” Heavy Duty Flail

The Heavy Duty Flail can cut grass or brush up to 4in in diameter and is equipped with reversible hammer knives.
KB1800/2200, KB21



Heavy Duty Rotary

The Heavy Duty Rotary can cut grass and brush up to 5in in diameter and comes with a heavy duty three-leaf blade bar and a center feed, hydraulic door as standard equipment.
Available in 50” or 60”.
50” Rotary only available with blade pan.
KB1800/2200, KB21



Maintainer Head

The Maintainer Head is made to remove excess dirt or unwanted vegetation from ditches 22in wide and 11in deep.
KB1800/2200



50” Severe Duty Flail

The Severe Duty Flail is designed to cut growth and then grind material into mulch. This flail can cut up to 50in wide and 8in in diameter and features 18 individual cubit knife cutting tools.
KB1800/2200



60” Limb Shear

The Limb Shear cuts like a hedge trimmer and can tackle limbs up to 4in in diameter.
KB1800/2200

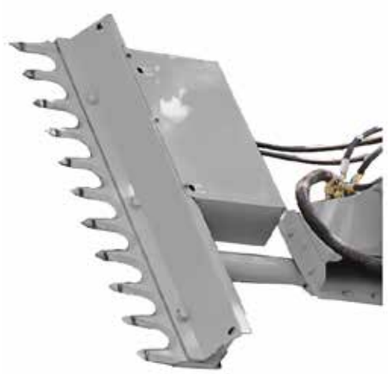

Saw Blade

The Saw Blade is equipped with circular blades that allow you to cut as clean as a chainsaw. The Saw Blade can cut vegetation up to 4in in diameter and comes in 90” and 69” blade widths.
KB1800/2200, KB21



Quick Hitch

The Terrain King quick attach system allows you to change cutting heads in the shop or field in approximately ten minutes.
KB1800/2200



KSM60

The KSM60 is made for cutting heavy grass and light brush.
The KSM60 is a hydraulically driven rotary cutting head with an optional hydraulic breakaway arm and available with a blade pan or a blade bar.

Cutting Capacity
2” diameter

Cutting Width
60”





KSB5/KSB6 Sickle Bar

The KSB5/KSB6 includes an operator station that features a dual-axis joystick control, master cut-off switch, and blade reverser switch to clear knife jams.

Cutting Capacity
.5”

Cutting Width
5’ & 6’

Tilt Angle
The tilt angle of 90° up and 75° down.

Safety
The unit features an hydraulic, self returning breakaway system that allows the cutter bar to hinge when obstructed

Flail King

Rear Mount Flail mower with a 3-point hitch mounting system that allows you greater versatility to use the tractor for other jobs.

Cutting Capacity
1” Diameter

Cutting Width
74”, 88”, & 96”

Knife Weight Options
Fine Cut (2 oz)
Standard (3 oz)
Extreme Service (4 oz)





Terrain Master

The Terrain Master combines the Terrain Master Mid-Mount Flail with the Flail King Rear-Mount to create a Flail system that allows you to mow from 62” up to 21.7’.

The Terrain Master includes various knife options such as Fine Cut (2 oz), Standard (3 oz), and Extreme Service (4 oz).

Customize the Terrain Master to fit your needs with any of these configurations:

62”, 74”, or 88” right wing with an optional 96” or 88” Flail King

Dual wing configuration available in 62”, 74”, or 88” wings with 96” Flail King

Truckat

The TrucKat Boom Mower is crafted from premium materials and designed with ultimate freedom in mind. This means you can travel to and from job sites at standard road speeds, and once there, leverage the latest advancements in boom mowing technology to handle even the toughest tasks effortlessly. Now available with 18’ and 22’ booms, offering greater reach and power.



Wildkat

The WildKat (Side Shift w/ ARCH) mower operates like a side mower with a swing system like a boom mower. The WildKat mower gives the operator the ability to shift the cutter head horizontally up to 29½ inches with the hydraulic control system.
The WildKat’s ARCH BOOM design with the combined side shift features gives the mower a maximum reach out of 16 feet and a reach up of 12.8 feet.

Other Available Attachments
60” Rotary Head | 75” Grass Flail



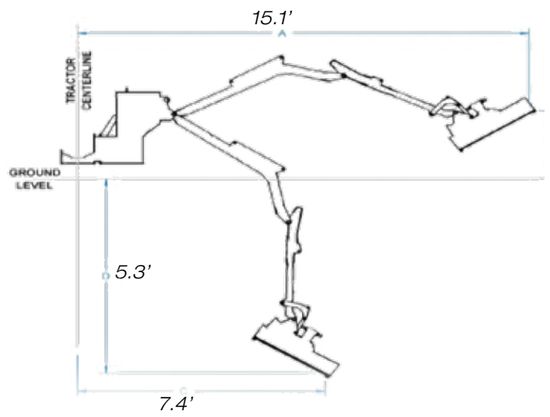

Boom Reach based on 60’ Rotary

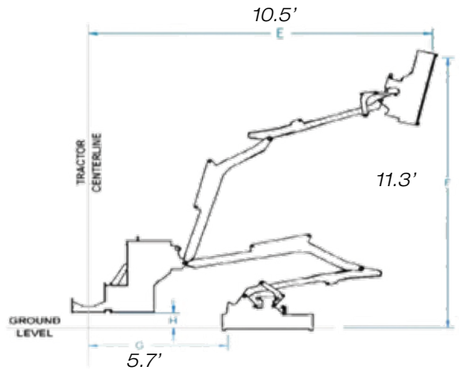

variation in tractor or tire size may cause some difference in dimensions

RM Series

Rear mount boom built for reliability and efficiency.

Boom Reach Options
16’4” and 18’1”
*with 60” Rotary Head

Tractor Minimums
58 PTO HP
540 rpm PTO output shaft
CAB

Other Available Attachments
48” Medium Duty Flail
48” Heavy Duty Flail
48” Medium Duty Rotary
60” Heavy Duty Rotary
69” Buzz Bar®



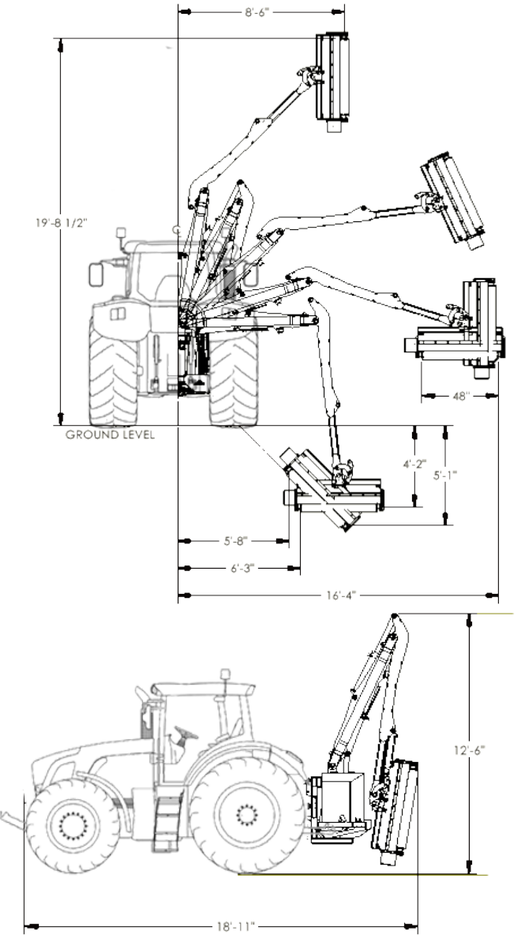

Boom Reach based on RM165 with Flail Mower

Switch Blade

Cutting Capacity
.5”
Cutting Width
5’ & 6’

Tilt Angle
The tilt angle of 90° up and 75° down.

Tractor Minimums
3,000 lbs
Safety
The unit features an automatic, self returning breakaway system that allows the cutter bar to hinge when obstructed



2100

Mounting Frame & Turning Arm
Bolted frame design structurally ties front bolster to rear axle plates. Mid-mounted with lower center of gravity.
Control Features
Master safety switch permits six second blade shut-down. Standard proportional joystick controls.
Hydraulic Reservoir
Large capacity under fender hydraulic tank with a return filter placement that allows easy access.

Boom Reach
21’ *with 60” Rotary Head
Below Grade Reach
13’6”
Horizontal Reach
21’7”
Vertical Reach
18’1”
Other Available Attachments
48” Heavy Duty Flail
50” and 60” Heavy Duty Rotary Saw Blade



TRAXX RC75

General Specs
- Variable travel speeds 0-4.3mph
- Overall Width - 51”
- Overall Length - 90”

*without attachment
- Overall Height - 41” / 31”
- Total Weight - 2,650lbs / 2,870lbs

*without attachment
- 1,200lb attachment lift capacity
- Cutting height range between .79in - 3.35in

Engine
- 75 HP
- 10 gallon fuel tank capacity
- 5.3 gallon oil tank capacity



TRAXX RC75 Head Attachments

HEAVY DUTY GRASS FLAIL



Technical Specifications
- Choice of grass cutting flails or hammer flails
- Full width rear roller
- Hydraulic front hood
- 2” cutting capacity
- up to 3” cutting height
- +/- 14 degree head angling and flotation
- 3000 RPM rotor speed
- 375lbs weight



63" Flail Head



75" Flail Head

MULCHER WITH PUSH BAR

Technical Specifications
- 63” Cutting width
- Ultra duty heavy duty hammer flails
- Unique high-performance rotor allows flails to swing through 360 degrees
- Hydraulic front hood
- Reinforced steel push bar
- 4” cutting capacity
- 3000 RPM rotor speed
- +/- 14 degree head angling and flotation
- 692lbs weight



FIXED TOOTH FORESTRY FLAIL WITH PUSH BAR

Technical Specifications
- 63” Cutting width
- Hard-wearing tungsten carbide fixed teeth
- Hydraulic front hood
- Reinforced steel push bar
- 4” cutting capacity
- 3000 RPM rotor speed
- +/- 14 degree head angling and flotation
- 782lbs weight



FRONT BUCKET

Technical Specifications
- 51” Working width
- Heavy-duty build
- 1137lbs lifting capacity (heavy duty model
- 996lbs lifting capacity (standard duty model)
- Ideal for work in quarries, culverts, and construction sites



SNOW BLADE

Technical Specifications
- 67” working width
- Hydraulically adjustable blade angle
- Choice of standard plastic blade or optional steel blade
- 23” blade height
- +/- 20 degree blade oscillation
- +/- 14 degree head angling and flotation
- Replaceable blade edge
- 209lbs weight (plastic model)
- 374lbs weight (steel model)



GOVERNMENT SOLUTIONS

Through cooperative purchasing programs, government agencies can acquire Terrain King equipment quickly and confidently while continuing to receive the personalized support of trusted local dealers.

Terrain King

Sourcewell - Contract No. 032525-AGI
Canoe Canada - Contract No. 070821-AGI 032525-AGI
Buy Board - Contract No. 806-26
NASPO - Contract No. 61514
GSA - Contract No. GS-03F-113DA

GENUINE OEM PARTS

Alamo Group Municipal Mowing Solutions replacement parts meet the rigid guidelines necessary to satisfy warranty requirements.

Using anything less means you aren't maintaining the structural, operational, and safety integrity of your equipment. It is the owner's responsibility to ensure the equipment is maintained in compliance with these safety standards.

Our OEM replacement parts are specifically designed for peak performance of your Alamo Industrial, Terrain King, Mantis, and Tiger mowing and trimming equipment.

We design and build to exact specifications requiring strict chemical strength and performance characteristics. Imitation parts may not function properly because they are reversed engineered.

AGMMS parts are tested to meet SAE and ASAE safety standards. We take pride in manufacturing quality parts that consistently test above and beyond the industry standards.

AGMMS parts experts are always available to answer any questions you have. Unlike imitators, they possess the knowledge of and have first-hand experience with our complete line of equipment.

CONTACT US

Terrain King
1502 E. Walnut St.,
Seguin, TX 78155
800-882-5762 | terrainking.com

Municipal Mowing Solutions

©2026 Alamo Group or its affiliates. 2026 Alamo Group Municipal Mowing Solutions All rights reserved. This information is intended to be of a general nature only; specifications are subject to change without notice as we continue to improve our products.
Warranty: One year limited parts and labor. Non-governmental users are subject to modified policy. Only genuine AGMMS parts should be used for warranty replacement.